MERCRUISER (7.4l MIE W/B/W GM 454 V-8 1988-1992)
Serial Nbr Range: 0B788366 THRU 0D715493 ()

STARTER AND ALTERNATOR

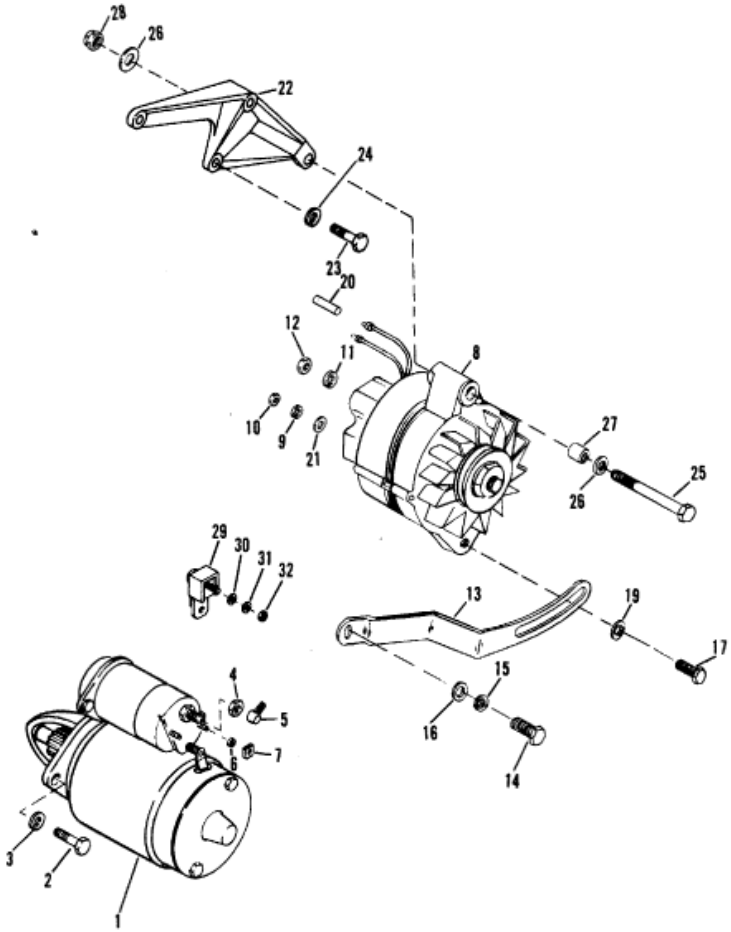

Parts List

Ref	Class	Part	Description	Qty	Comment	Footnote
1	50	76965A 3	STARTER, L.H. ROTATION (DELC	1		
1	50	79604A 3	STARTER, R.H. ROTATION (DELI	1		
2	10	47462	SCREW, STARTER MOTOR (1-1/	2		
3	13	32993	LOCKWASHER, STARTER MOTO	2		
4	11	86226	NUT, STARTER TERMINAL (3/8-'	OPT.		
4	11	15874	NUT, STARTER TERMINAL (10MI	OPT.		
5	85	79695	BOOT, INSULATOR - STARTER T	1		
6	13	26995	LOCKWASHER, STARTER TERM	2		
7	11	26419	NUT, STARTER TERMINAL (#8-3	OPT.		
7	11	40021 1	NUT, STARTER TERMINAL (5 MI	OPT.		
8		92497A 3	ALTERNATOR	1		
9	13	26996	LOCKWASHER, ALTERNATOR TI	1		
10	11	79989	NUT, ALTERNATOR TERMINAL (	1		
11	13	21272	LOCKWASHER, ALTERNATOR TI	1		
12	11	64015	NUT, ALTERNATOR TERMINAL (	1		
13		85013T	BRACE, ALTERNATOR ADJUSTIN	1		
14	10	47462	SCREW, ALTERNATOR BRACE	1		
15	13	32993	LOCKWASHER, ALTERNATOR BI	1		
16	12	31263	WASHER, ALTERNATOR BRACE	1		
17	10	29198	SCREW, ALTERNATOR BRACE (;	1		
19	12	26168	WASHER, ALTERNATOR BRACE	1		
20		57908 11	TUBING, ALTERNATOR LEADS	2		
21	12	96457	WASHER, ALTERNATOR TERMIN	1		
22		47487A 2	BRACKET, ALTERNATOR	1		
23	10	34353	SCREW, ALTERNATOR BRACKE'	2		
23	10	35787	SCREW, ALTERNATOR BRACKE'	1		
24	13	35048	LOCKWASHER, ALTERNATOR BI	3		
25	10	48308	SCREW, ALTERNATOR (3-3/4")	1		
26	12	25970	WASHER, ALTERNATOR BRACK	3		
27	23	33186	BUSHING, ALTERNATOR BRACK	1		
28	11	23161	NUT, ALTERNATOR BRACKET SI	1		
29	88	79023A91	FUSE ASSEMBLY (90 AMP) NOT	1		
30	12	96457	WASHER, FUSE TERMINAL NOT	1		
31	13	26992	LOCKWASHER, FUSE TERMINAL	1		
32	11	21825	NUT, FUSE TERMINAL NOT USE	1		